Operator’s Manual

ST 227P

Gasoline containing up to 10% ethanol (E10) is acceptable for use in this machine.
The use of any gasoline exceeding 10% ethanol (E10) will void the product warranty.

Please read the owner's manual carefully and make sure you understand the instructions before using the machine.

115 68 34-27 Rev. 3

English

IMPORTANT

Safe Operation Practices for Walk-Behind Snow Throwers

This snow thrower is capable of amputating hands and feet and throwing objects.
Failure to observe the following safety instructions could result in serious injury.

Look for this symbol to point out important safety precautions. It means CAUTION!!! BECOME ALERT!!! YOUR SAFETY IS INVOLVED.

WARNING: Always disconnect spark plug wire and place it where it cannot contact plug in order to prevent accidental starting when setting up, transporting, adjusting or making repairs.

WARNING: This snow thrower is for use on sidewalks, driveways and other ground level surfaces. Caution should be exercised while using on sloping surfaces. Do not use snow thrower on surfaces above ground level such as roofs of residences, garages, porches or other such structures or buildings.

WARNING: Snow throwers have exposed rotating parts, which can cause severe injury from contact, or from material thrown from the discharge chute. Keep the area of operation clear of all persons, small children and pets at all times including startup.

CAUTION: Muffler and other engine parts become extremely hot during operation and remain hot after engine has stopped. To avoid severe burns on contact, stay away from these areas.

WARNING: Engine exhaust, some of its constituents, and certain vehicle components contain or emit chemicals known to the State of California to cause cancer and birth defects or other reproductive harm.

Training

1. Read, understand and follow all instructions on the machine and in the manual(s) before operating this unit. Be thoroughly familiar with the controls and the proper use of the equipment. Know how to stop the unit and disengage the controls quickly.
2. Never allow children to operate the equipment. Never allow adults to operate the equipment without proper instruction.
3. Keep the area of operation clear of all persons, particularly small children.
4. Exercise caution to avoid slipping or falling, especially when operating the snow thrower in reverse.

Preparation

1. Thoroughly inspect the area where the equipment is to be used and remove all doormats, sleds, boards, wires, and other foreign objects.
2. Disengage all clutches and shift into neutral before starting the engine (motor).
3. Do not operate the equipment without wearing adequate winter garments. Avoid loose fitting clothing that can get caught in moving parts. Wear footwear that will improve footing on slippery surfaces.
4. Handle fuel with care; it is highly flammable
   (a) Use an approved fuel container.
   (b) Never add fuel to a running engine or hot engine.
   (c) Fill fuel tank outdoors with extreme care. Never fill fuel tank indoors.
   (d) Never fill containers inside a vehicle or on a truck or trailer bed with a plastic liner. Always place containers on the ground, away from your vehicle, before filling.
   (e) When practical, remove gas-powered equipment from the truck or trailer and refuel it on the ground. If this is not possible, then refuel such equipment on a trailer with a portable container, rather than from a gasoline dispenser nozzle.
   (f) Keep the nozzle in contact with the rim of the fuel tank or container opening at all times, until refueling is complete. Do not use a nozzle lock-open device.
   (g) Replace gasoline cap securely and wipe up spilled fuel.
   (h) If fuel is spilled on clothing, change clothing immediately.
5. Use extension cords and receptacles as specified by the manufacturer for all units with electric drive motors or electric starting motors.
6. Adjust the collector housing height to clear gravel or crushed rock surface.
7. Never attempt to make any adjustments while the engine (motor) is running (except when specifically recommended by manufacturer).
8. Always wear safety glasses or eye shields during operation or while performing an adjustment or repair to protect eyes from foreign objects that may be thrown from the machine.
9. Use ear protectors to avoid damage to hearing.

Operation

1. Do not put hands or feet near or under rotating parts. Keep clear of the discharge opening at all times.
2. Exercise extreme caution when operating on or crossing gravel drives, walks, or roads. Stay alert for hidden hazards or traffic.
3. After striking a foreign object, stop the engine (motor), remove the wire from the spark plug, disconnect the cord on electric motors, thoroughly inspect the snow thrower for any damage, and repair the damage before restarting and operating the snow thrower.
4. If the unit should start to vibrate abnormally, stop the engine (motor) and check immediately for the cause. Vibration is generally a warning of trouble.
5. Stop the engine (motor) whenever you leave the operating position, before unclogging the collector/impeller housing or discharge chute, and when making any repairs, adjustments or inspections.

6. When cleaning, repairing or inspecting the snow thrower, stop the engine and make certain the collector/impeller and all moving parts have stopped. Disconnect the spark plug wire and keep the wire away from the plug to prevent someone from accidentally starting the engine.
7. Do not run the engine indoors, except when starting the engine and for transporting the snow thrower in or out of the building. Open the outside doors; exhaust fumes are dangerous.
8. Exercise extreme caution when operating on slopes.
9. Never operate the snow thrower without proper guards, and other safety protective devices in place and working.
10. Never direct the discharge toward people or areas where property damage can occur. Keep children and others away.
11. Do not overload the machine capacity by attempting to clear snow at too fast a rate.
12. Never operate the machine at high transport speeds on slippery surfaces. Look behind and use care when operating in reverse.
13. Disengage power to the collector/impeller when snow thrower is transported or not in use.
14. Use only attachments and accessories approved by the manufacturer of the snow thrower (such as wheel weights, counterweights, or cabs).
15. Never operate the snow thrower without good visibility or light. Always be sure of your footing, and keep a firm hold on the handles. Walk; never run.
16. Never touch a hot engine or muffler.

Clearing a Clogged Discharge Chute

Hand contact with the rotating impeller inside the discharge chute is the most common cause of injury associated with snow throwers. Never use your hand to clean out the discharge chute. To clear the chute:

1. SHUT THE ENGINE OFF!
2. Wait 10 seconds to be sure the impeller blades have stopped rotating.
3. Always use a clean-out tool, not your hands.

Maintenance and Storage

1. Check shear bolts and other bolts at frequent intervals for proper tightness to be sure the equipment is in safe working condition.
2. Never store the machine with fuel in the fuel tank inside a building where ignition sources are present such as hot water heaters, space heaters, or clothes dryers. Allow the engine to cool before storing in any enclosure.
3. Always refer to operator's manual for important details if the snow thrower is to be stored for an extended period.
4. Maintain or replace safety and instruction labels, as necessary.
5. Run the machine a few minutes after throwing snow to prevent freeze-up of the collector/impeller.

CONGRATULATIONS on your purchase of a new snow thrower. It has been designed, engineered and manufactured to give best possible dependability and performance.

Should you experience any problem you cannot easily remedy, please contact your nearest authorized service center. We have competent, well-trained technicians and the proper tools to service or repair this unit.

Please read and retain this manual. The instructions will enable you to assemble and maintain your snow thrower properly. Always observe the "SAFETY RULES".

SERIAL NUMBER: _____

DATE OF PURCHASE: _____

THE MODEL AND SERIAL NUMBERS WILL BE FOUND ON A DECAL ATTACHED TO THE REAR OF THE SNOW THROWER HOUSING.

YOU SHOULD RECORD BOTH SERIAL NUMBER AND DATE OF PURCHASE AND KEEP IN A SAFE PLACE FOR FUTURE REFERENCE.

PRODUCT SPECIFICATIONS

Gasoline Capacity and Type:	0.71 Gallons (2,7 Liters) Unleaded Regular only
Oil Type (API SG–SL):	SAE 30 (above 50°F) SAE 5W-30 or 10W-30 (32° to 50°F) SAE 5W-30 (below 32°F)
Oil Capacity:	32 Ounces (0,9 Liters)
Spark Plug: **Gap:**	F6RTC 0.030" (0,762 mm)

CUSTOMER RESPONSIBILITIES

- Read and observe the safety rules.
- Follow a regular schedule in maintaining, caring for and using your snow thrower.
- Follow the instructions under "Maintenance" and "Storage" sections of this owner's manual.

TABLE OF CONTENTS

SAFETY RULES **2-3**
PRODUCT SPECIFICATIONS **3**
CUSTOMER RESPONSIBILITIES **3**
ASSEMBLY / PRE-OPERATION **5-6**
OPERATION **7-12**
MAINTENANCE SCHEDULE **13**
MAINTENANCE **13-14**
SERVICE AND ADJUSTMENTS **15-18**
STORAGE **19**
TROUBLESHOOTING **20**
WARRANTY **21-24**

PARTS PACKED SEPARATELY IN CARTON

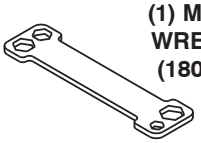

(1) MULTI-WRENCH (180684)

EXTRA SHEAR BOLTS AND NUTS

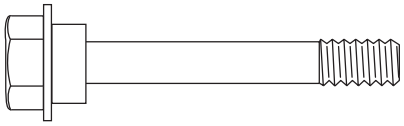

(6) SHEAR BOLTS 1/4-20 x 1-3/4 (585511801)

(6) LOCKNUTS 1/4-20 (73800400)

(3) KNOB 581697501

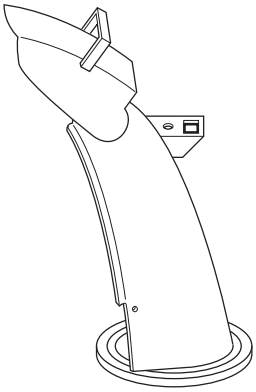

(1) DISCHARGE CHUTE

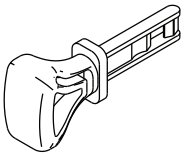

SAFTEY IGNITION KEY (S) (443059)

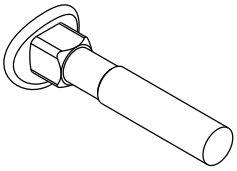

(2) CARRIAGE BOLTS 5/16-18 x 2 1/4" (587359001)

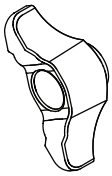

(2) HANDLE KNOBS (189713)

ROTATOR HEAD MOUNTING

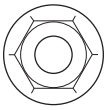

(1) LOCKNUT 3/8 (585691001)

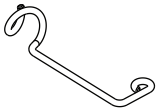

(1) CABLE GUIDE (581897301)

CHUTE DEFLECTOR REMOTE CONTROL

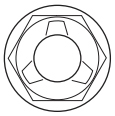

(1) LOCKNUT 5/16-18 (73970500)

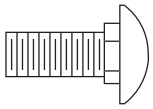

(1) CARRIAGE BOLT 5/16-18 x 5/8 (585832001)

(1) LOCKNUT 1/4-20 (585691401)

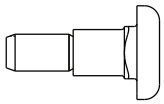

(1) SHOULDER BOLT 1/4-20 (585832201)

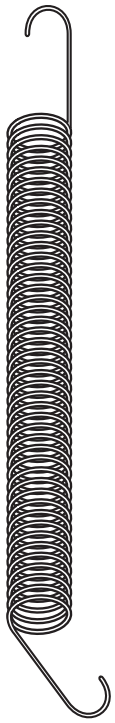

(1) SPRING (184505)

ASSEMBLY / PRE-OPERATION

Read these instructions and this manual in its entirety before you attempt to assemble or operate your new snow thrower. Reading the entire manual will familiarize you with the unit, which will assist you in assembly, operation and maintenance of the product.

Your new snow thrower has been assembled at the factory with the exception of those parts left unassembled for shipping purposes. All parts such as nuts, washers, bolts, etc., necessary to complete the assembly have been placed in the parts bag. To ensure safe and proper operation of your snow thrower, all parts and hardware you assemble must be tightened securely. Use the correct tools as necessary to ensure proper tightness.

REMOVE SNOW THROWER FROM CARTON

1. Remove all accessible loose parts and parts boxes from carton.
2. Cut down all four corners of carton and lay panels flat.
3. Remove the two (2) screws securing the auger housing to the pallet and remove additional steel brackets from skid plate if equipped.
4. Remove all packing materials.
5. Remove plastic ties securing the snow thrower to the pallet.
6. Remove snow thrower from carton and check carton thoroughly for additional loose parts.

HOW TO SET UP YOUR SNOW THROWER

Store the extra shear bolts, nuts and multi-wrench provided in parts bag.

NOTE: The multi-wrench may be used for assembly of the chute rotator head to snow thrower and making adjustments to the skid plates.

UNFOLD UPPER HANDLE (See Figs. 1-3)

1. Raise upper handle to the operating position.

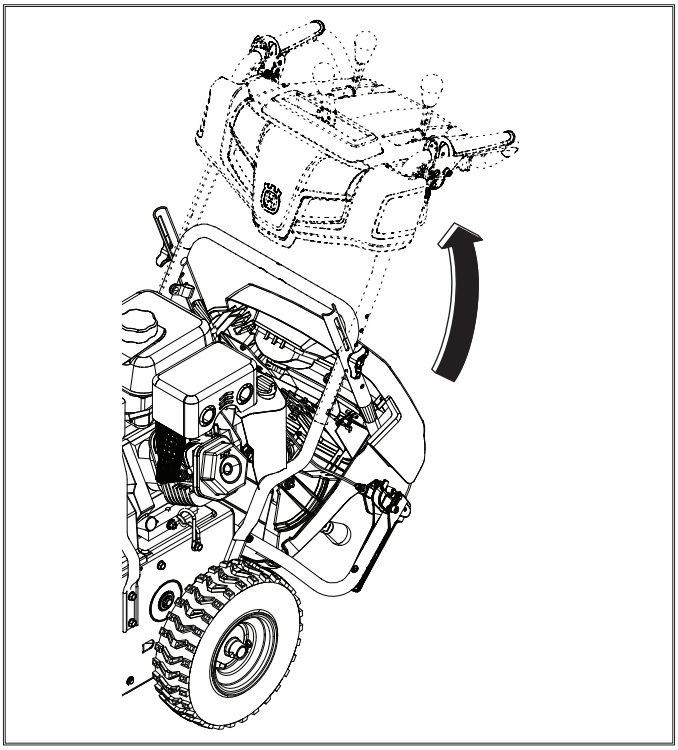

FIG. 1

2. Remove and discard temporary mounting bolts. Adjust the handle height to desired position using the appropriate mounting holes. Install carriage bolts that are supplied in the bag of parts and tighten lower handle knobs securely.

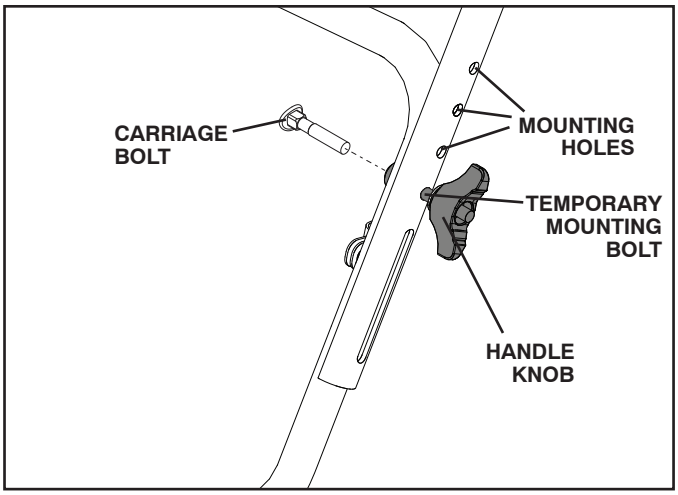

FIG. 2

3. Install the additional carriage bolts and handle knobs that are supplied in the bag of parts to secure upper handle to lower handle.

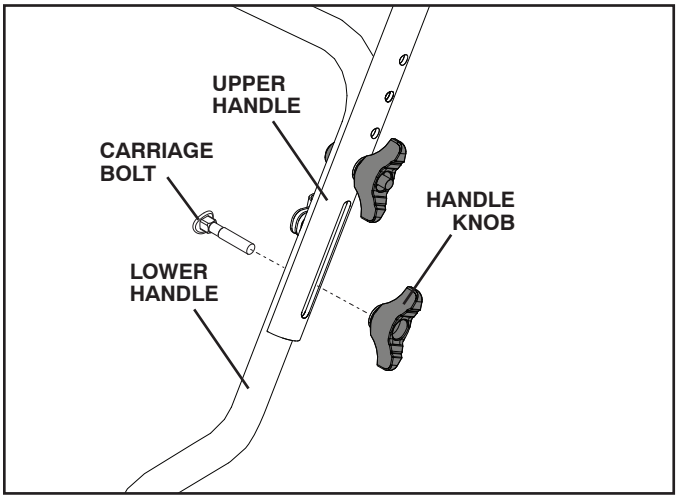

FIG. 3

INSTALL DISCHARGE CHUTE / CHUTE ROTATOR HEAD (See Fig. 4)

NOTE: The multi-wrench provided in your parts bag may be used to install the chute rotator head.

1. Place discharge chute assembly on top of chute base with discharge opening toward front of snow thrower.
2. Position chute rotator head over chute bracket. If necessary, rotate chute assembly to align square and pin on underside of chute rotator head with holes in chute bracket.
3. With chute rotator head and chute bracket aligned, position chute rotator head on pin and threaded stud of mounting bracket.
4. Install locknut and cable guide on threaded stud and tighten securely.

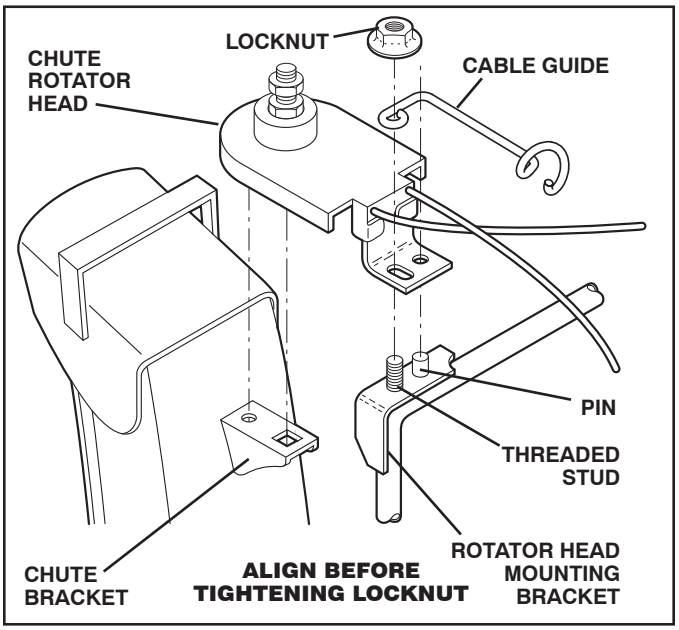

FIG. 4

5. Place rotator cables through cable guide and secure cables to the lower handle using the double clip.

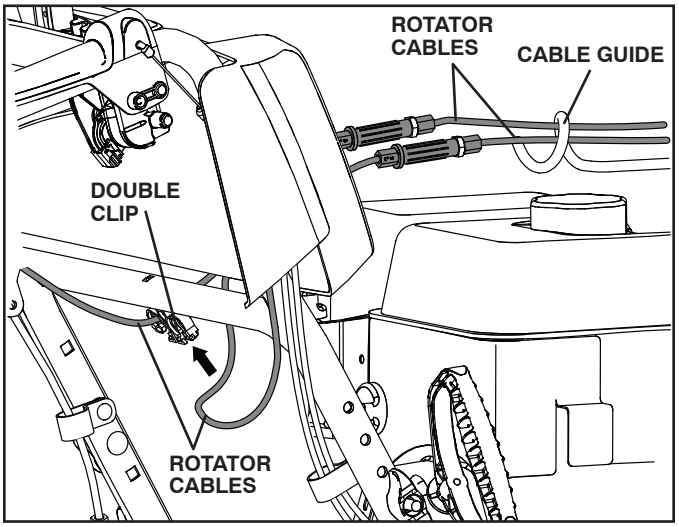

FIG. 5

INSTALL CHUTE DEFLECTOR REMOTE CONTROL (See Figs. 6 and 7)

1. Install remote cable bracket to discharge chute with 5/16-18 carriage bolt and 5/16-18 locknut as shown. Tighten securely.
2. Install remote cable eyelet to chute deflector with 1/4-20 shoulder bolt and 1/4-20 locknut as shown. Tighten nut securely. Eyelet will be loose on shoulder bolt.
3. Install spring hooks between hex nuts on chute rotator head and into hole in chute deflector as shown.

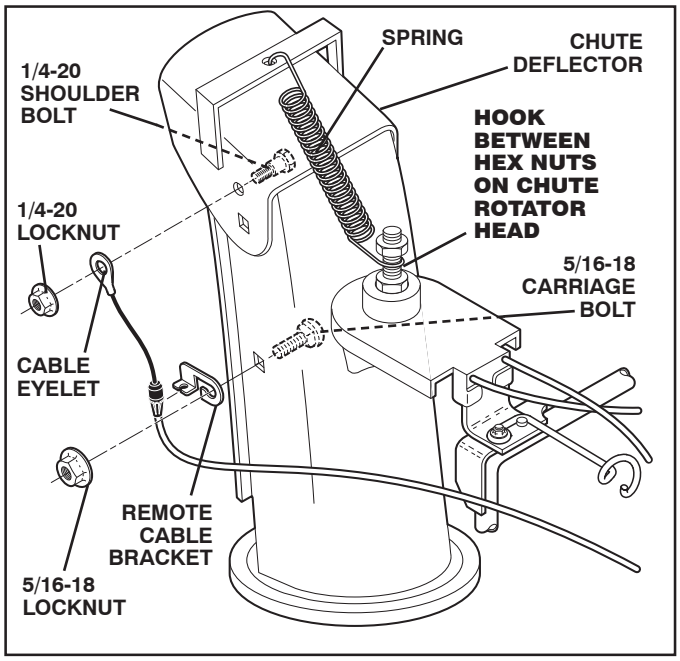

FIG. 6

4. Install all 3 control lever knobs by pressing them down onto the control levers.

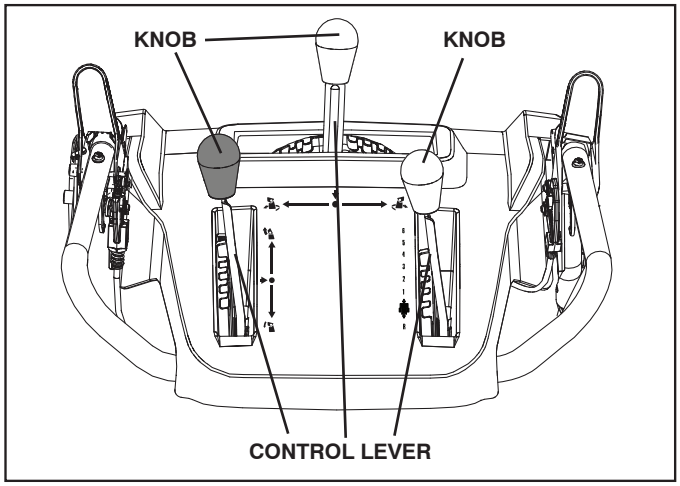

FIG. 7

CHECK TIRE PRESSURE

The tires on your snow thrower were overinflated at the factory for shipping purposes. Correct and equal tire pressure is important for best snow throwing performance.

- Reduce tire pressure to 14-17 PSI.

OPERATION

KNOW YOUR SNOW THROWER

READ THIS OWNER'S MANUAL AND ALL SAFETY RULES BEFORE OPERATING YOUR SNOW THROWER. Compare the illustrations with your snow thrower to familiarize yourself with the location of various controls and adjustments. Save this manual for future reference.

These symbols may appear on your snow thrower or in literature supplied with the product. Learn and understand their meaning.

DANGER OR WARNING

ENGINE ON

ENGINE OFF

FAST

SLOW

FUEL

OIL

EAR PROTECTION RECOMMENDED

READ AND FOLLOW ALL SAFETY INFORMATION AND INSTRUCTIONS BEFORE USE OF THIS PRODUCT. KEEP THESE INSTRUCTIONS FOR FUTURE REFERENCE.

DANGER
READ OPERATORS MANUAL
DO NOT OPERATE ON STEEP SLOPES
WATCH FOR THROWN OBJECTS
OPERATE AT A SAFE DISTANCE FOR OTHER PEOPLE

IGNITION KEY. INSERT TO START AND RUN

CHOKE CLOSED (START)

PRIMER

RECOIL START

CHOKE OPEN (RUN)

IGNITION KEY. PULL OUT TO STOP

DANGER

DO NOT PLACE HANDS NEAR BLADES

REMOVE SPARK PLUG WIRE BEFORE PERFORMING MAINTENANCE

DANGER
READ OPERATORS MANUAL
WATCH FOR THROWN OBJECTS
OPERATE AT A SAFE DISTANCE FROM OTHER PEOPLE

DANGER, KEEP FEET AWAY

DANGER, KEEP HANDS AWAY

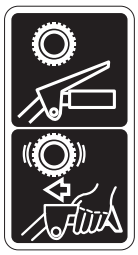
DISENGAGED

ENGAGED

TRACTION DRIVE CONTROL

SNOW DISCHARGE

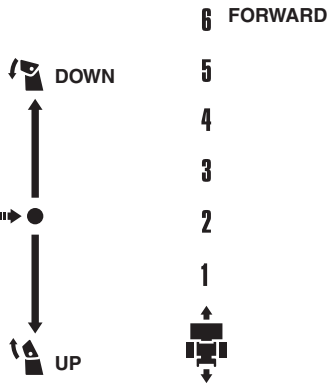

TRACTION DRIVE CONTROL

STEER LEFT

SNOW DISCHARGE

STEER RIGHT

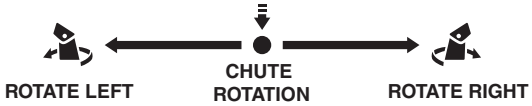

OPERATION

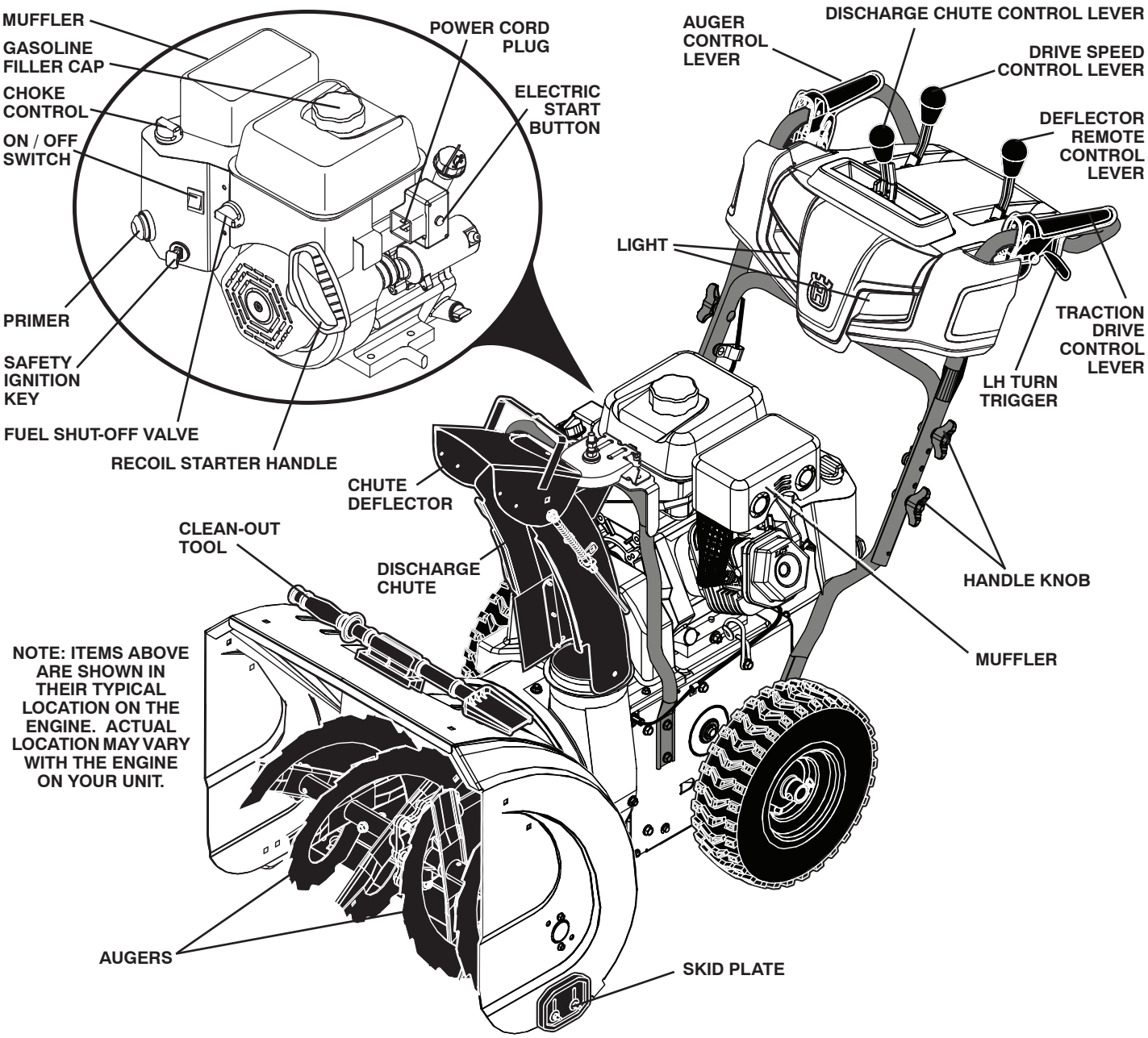

FIG. 8

MEETS A.N.S.I. SAFETY REQUIREMENTS

Our snow throwers conform to the standards of the American National Standards Institute.

Safety ignition key - must be inserted for the engine to start and run. Remove when snow thrower is not in use.

Electric start button - used for starting the engine.

Recoil (auxiliary) starter handle - used for starting engine.

Primer - pumps additional fuel from the carburetor to the cylinder for use when starting a cold engine.

Choke Control - used for starting a cold engine.

ON / OFF switch - used to STOP the engine.

Fuel shut off valve - used for shutting off the fuel flow to the engine.

Drive speed control lever - used to select forward or reverse motion and speed of snow thrower.

Traction drive control lever - used to engage power-propelled forward or reverse motion of snow thrower.

Auger control lever - used to engage auger motion (throw snow).

Discharge chute control lever - used to change the direction the snow is thrown.

Deflector remote control lever - used to change the distance the snow is thrown.

Skid plate - used to adjust height of scraper bar from the ground.

OPERATION

The operation of any snow thrower can result in foreign objects thrown into the eyes, which can result in severe eye damage. Always wear safety glasses or eye shields while operating your snow thrower or performing any adjustments or repairs. We recommend standard safety glasses or a wide vision safety mask worn over spectacles.

HOW TO USE YOUR SNOW THROWER

Know how to operate all controls before adding fuel or attempting to start the engine.

STOPPING

TRACTION DRIVE

- Release traction drive control lever to stop the forward or reverse movement of the snow thrower.

AUGER

- Release the auger control lever to stop throwing snow.

ENGINE

1. Move ON / OFF switch to “OFF” position.
2. Remove (do not turn) safety ignition key to prevent unauthorized use.

NOTE: Never use choke to stop engine.

TO USE FUEL SHUT-OFF VALVE (See Fig. 9)

The fuel shut-off valve is located beneath the fuel tank on the engine. Always operate the snow thrower with the fuel shut-off valve in the OPEN position.

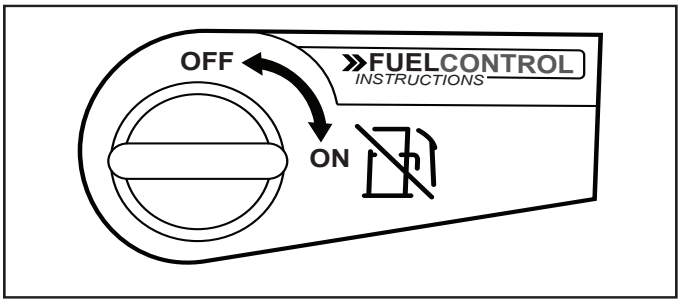

FIG. 9

TO USE CHOKE CONTROL (See Fig. 10)

The choke control is located on the engine. Use the choke control whenever you are starting a cold engine. Do not use to start a warm engine.

- To engage choke, rotate lever clockwise to “FULL” position.

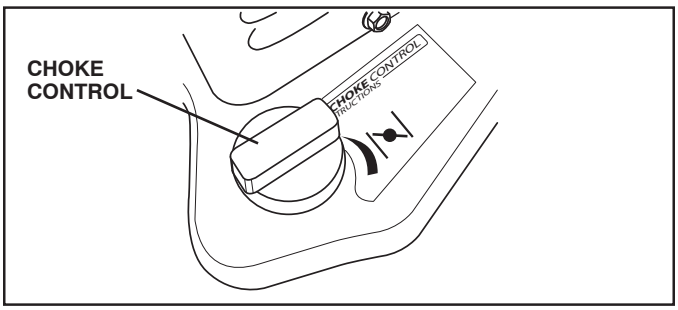

FIG. 10

TO CONTROL SNOW DISCHARGE (See Fig. 11)

WARNING: Snow throwers have exposed rotating parts, which can cause severe injury from contact, or from material thrown from the discharge chute. Keep the area of operation clear of all persons, small children and pets at all times including startup.

WARNING: If the discharge chute or auger become clogged, shut-off engine and wait for all moving parts to stop. Use the clean-out tool, NOT YOUR HANDS, to unclog the chute and/or auger.

The DIRECTION in which snow is to be thrown is controlled by the discharge chute control lever.

- To change the discharge chute position, pull backward on discharge chute control lever and move lever left or right until chute is in desired position. Be sure lever springs back and locks into desired position.

The DISTANCE that snow is thrown is controlled by the position of the chute deflector. Set the deflector low to throw snow a short distance; set the deflector higher to throw snow farther.

- Push right on chute deflector control lever and move lever forward to lower the deflector and decrease the distance. Move lever back to raise the deflector and increase the distance. Be sure lever springs back and locks into desired position.

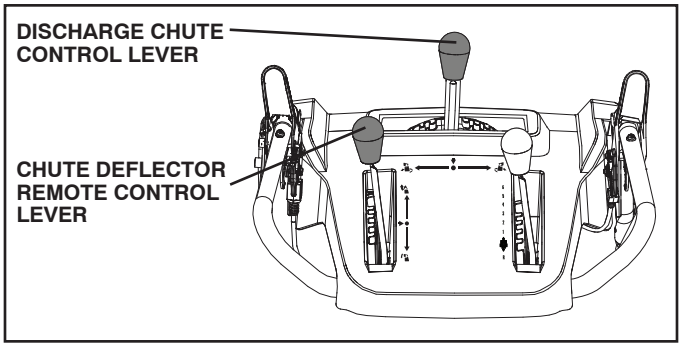

FIG. 11

TO THROW SNOW (See Fig. 12)

The auger rotation is controlled by the auger control lever located on the right side handle.

- Squeeze auger control lever to handle to engage the auger and throw snow.
- Release the auger control lever to stop throwing snow.

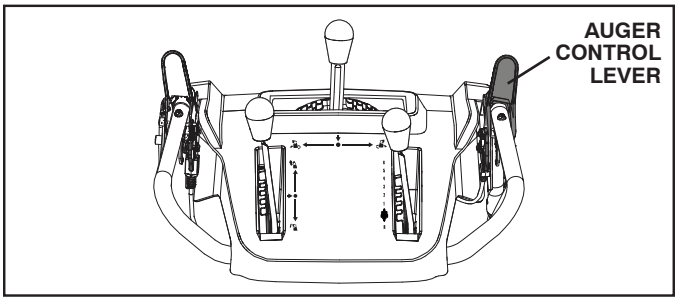

FIG. 12

USING THE CLEAN-OUT TOOL (See Fig. 13)

In certain snow conditions, the discharge chute may become clogged with ice and snow. Use the clean-out tool to dislodge this blockage.

When cleaning, repairing, or inspecting, make certain all controls are disengaged and the auger/impeller and all moving parts have stopped. Disconnect the spark plug wire and keep the wire away from the spark plug to prevent accidental starting.

- Release the auger control lever and shut off the engine.
- Remove the clean-out tool from its mounting clip. Grasp the tool firmly by the handle while pushing and twisting the tool into the discharge chute to dislodge the blockage.

After the packed snow has been dislodged, return the clean-out tool to it's mounting clip by pushing it into the clip.

- Make sure the discharge chute is pointed in a safe direction (no vehicles, buildings, people, or other objects are in the direction of discharge) before restarting engine.
- Restart the engine, then squeeze the auger control lever to the handle to clear snow from the auger housing and the discharge chute.

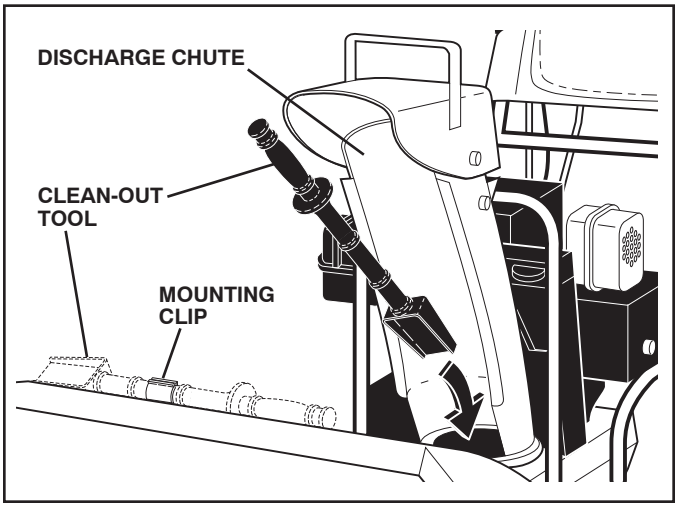

FIG. 13

TO MOVE FORWARD AND BACKWARD (See Fig. 14)

SELF-PROPELLING, forward and reverse movement of the snow thrower, is controlled by the traction drive control lever located on the left side handle.

- Squeeze traction drive control lever to handle to engage the drive system.
- Release traction drive control lever to stop the forward or reverse movement of the snow thrower.

SPEED and DIRECTION are controlled by the drive speed control lever.

- Push right on the speed control lever and move lever to desired position BEFORE engaging the traction drive control lever. Be sure lever springs back and locks into desired position.

CAUTION: Do not move speed control lever when traction drive control lever is engaged. Damage to the snow thrower can result.

- Slower speeds are for heavier snow and faster speeds are for light snow and transporting the snow thrower. It is recommended that you use a slower speed until you are familiar with the operation of the snow thrower.

NOTE: When both traction drive and auger control levers are engaged, the traction drive control lever will lock the auger control lever in the engaged position. This will allow you to release your right hand from the handle and adjust the discharge chute direction without interrupting the snow throwing process.

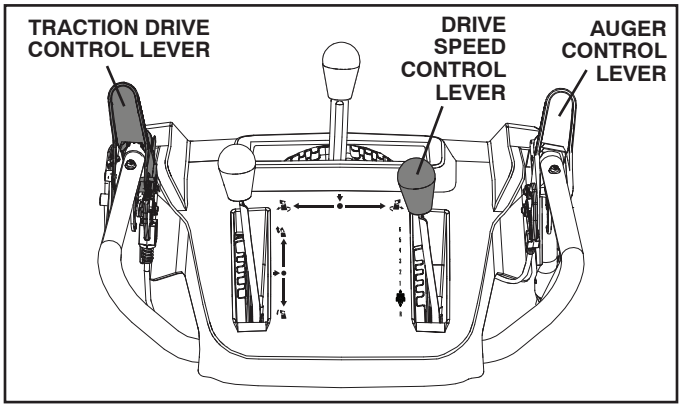

FIG. 14

POWER STEERING OPERATION (See Fig. 15)

Steering triggers are used to assist in steering your snow thrower. The triggers are located on the underside of each handle. When a trigger is squeezed, it disengages the drive wheel on that side of snow thrower and allows it to turn in that direction.

- To turn left – squeeze left side trigger.
- To turn right – squeeze right side trigger.

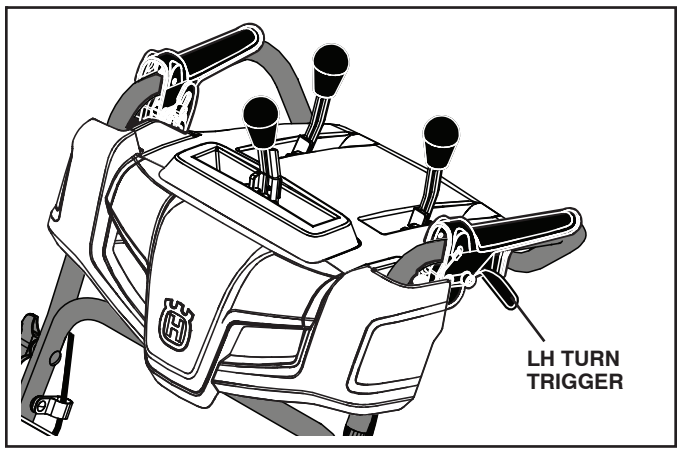

FIG. 15

TO ADJUST SKID PLATES (See Fig. 16)

NOTE: The wrench provided in your parts bag may be used to adjust the skid plates.

Skid plates are located on each side of the auger housing and adjust the clearance between the scraper bar and the ground surface. Adjust skid plates evenly to proper height for current surface conditions. For removal of snow in normal conditions, such as a paved driveway or sidewalk, place skid plates in the highest position (lowest scraper clearance) to give a 1/8" clearance between the scraper bar and the ground. Use a middle position if the surface to be cleared is uneven.

NOTE: It is not recommended to operate the snow thrower over gravel or rocky surfaces. Objects such as gravel, rocks or other debris, can easily be picked up and thrown by the impeller, which can cause serious personal injury, property damage or damage to the snow thrower.

- If snow thrower must be operated over gravel surface, use extra caution and be sure skid plates are adjusted to lowest (highest scraper clearance) position.

1. Shut off engine and wait for all moving parts to stop.
2. Adjust skid plates by loosening the 1/2" hex nuts, then moving skid plate to desired position. Be sure both plates are adjusted evenly. Tighten securely.

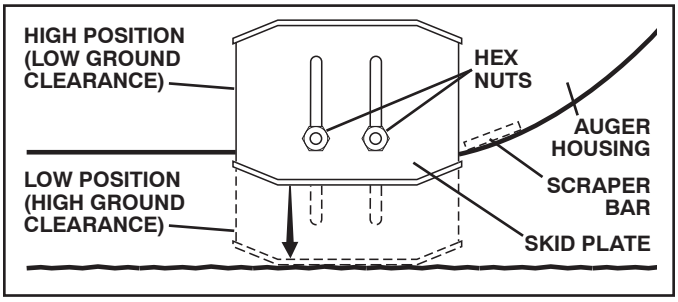

FIG. 16

SCRAPER BAR (See Fig. 16)

The scraper bar is not adjustable, but is reversible. After considerable use it may become worn. When it has worn almost to the edge of the housing, it can be reversed, providing additional service before requiring replacement. Replace a damaged or worn scraper bar.

BEFORE STARTING THE ENGINE

CHECK ENGINE OIL LEVEL (See Fig. 17)

The engine on your snow thrower has been shipped from the factory already filled with oil.

1. Check engine oil with snow thrower on level ground.
2. Remove oil fill cap/dipstick and wipe clean, reinsert the dipstick and screw tight, wait for a few seconds, remove and read oil level. If necessary, add oil until "FULL" mark on dipstick is reached. Do not overfill.

- To change engine oil, see "TO CHANGE ENGINE OIL" in the Maintenance section of this manual.

ADD GASOLINE (See Fig. 17)

- Fill fuel tank to bottom of tank filler neck. Do not overfill. Use fresh, clean, regular unleaded gasoline with a minimum of 87 octane. Do not mix oil with gasoline. Purchase fuel in quantities that can be used within 30 days to assure fuel freshness.

WARNING: Wipe off any spilled oil or fuel. Do not store, spill or use gasoline near an open flame.

CAUTION: Alcohol blended fuels (called gasohol or using ethanol or methanol) can attract moisture which leads to separation and formation of acids during storage. Acidic gas can damage the fuel system of an engine while in storage. To avoid engine problems, the fuel system should be emptied before storage of 30 days or longer. Drain the gas tank, start the engine and let it run until the fuel lines and carburetor are empty. Use fresh fuel next season. See Storage Instructions for additional information. Never use engine or carburetor cleaner products in the fuel tank or permanent damage may occur.

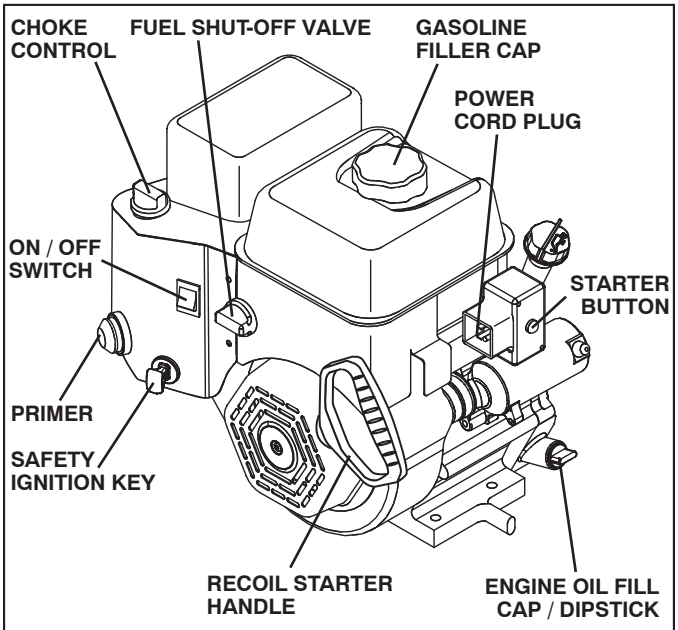

NOTE: ALL ITEMS ARE SHOWN IN THEIR TYPICAL LOCATION. ACTUAL LOCATION MAY VARY WITH ENGINE ON YOUR UNIT.

FIG. 17

OPERATION

TO START ENGINE

- Ensure fuel shut-off valve is in the “OPEN” position.

Your snow thrower engine is equipped with both a 120 Volt A.C. electric starter and a recoil starter. The electric starter is equipped with a three-wire power cord and plug and is designed to operate on 120 Volt A.C. household current.

- Ensure your house is a 120 Volt A.C. three-wire grounded system. If you are uncertain, consult a licensed electrician.

WARNING: Do not use the electric starter if your house is not a 120 Volt A.C. three-wire grounded system. Serious personal injury or damage to your snow thrower could result.

COLD START - ELECTRIC STARTER

1. Insert safety ignition key (tied to recoil start cord) into ignition slot until it clicks. DO NOT turn the key. Keep the extra safety ignition key in a safe place.
2. Place ON / OFF switch in “ON” position.
3. Move choke control to “FULL” position.
4. Push the primer three (3) times.

NOTE: Over priming may cause flooding, preventing the engine from starting. If you do flood the engine, wait a few minutes before attempting to start and DO NOT push the primer.

5. Connect the power cord to the engine.
6. Plug the other end of the power cord into a three-hole grounded 120 Volt A.C. receptacle.
7. Push starter button until engine starts.

IMPORTANT: Do not crank engine more than five continuous seconds between each time you try to start. Wait 5 to 10 seconds between each attempt.

8. When the engine starts, release the starter button and slowly move the choke control to the “OFF” position.
9. Disconnect the power cord from the receptacle first, then from the engine.

Allow the engine to warm up for a few minutes. Engine will not develop full power until it has reached normal operating temperature.

WARM START - ELECTRIC STARTER

Follow the steps above, keeping the choke control in the “OFF” position.

COLD START - RECOIL STARTER

1. Insert safety ignition key (tied to recoil start cord) into ignition slot until it clicks. DO NOT turn the key. Keep the extra safety ignition key in a safe place.
2. Place ON / OFF switch in “ON” position.
3. Rotate choke control to “FULL” position.
4. Push the primer three (3) times.

NOTE: Over priming may cause flooding, preventing the engine from starting. If you do flood the engine, wait a few minutes before attempting to start and DO NOT push the primer.

5. Pull recoil starter handle quickly. Do not allow starter rope to snap back.
6. When the engine starts, release the recoil starter handle and slowly move the choke control to the “OFF” position.

Allow the engine to warm up for a few minutes. Engine will not develop full power until it has reached normal operating temperature.

WARM START - RECOIL STARTER

Follow the steps above, keeping the choke in the “OFF” position. DO NOT push the primer.

BEFORE STOPPING

Run the engine for a few minutes to help dry off any moisture on the engine.

IF RECOIL STARTER HAS FROZEN

If the recoil starter has frozen and will not turn the engine, proceed as follows:

1. Grasp the recoil starter handle and slowly pull as much rope out of the starter as possible.
2. Release the recoil starter handle and let it snap back against the starter.

If the engine still fails to start, repeat the above steps or use the electric starter.

SNOW THROWING TIPS

- Go slower in deep, freezing or heavy wet snow. Use the drive speed control, NOT the ON / OFF switch, to adjust speed.
- It is easier and more efficient to remove snow immediately after it falls.
- The best time to remove snow is the early morning. At this time the snow is usually dry and has not been exposed to the direct sun and warming temperatures.
- Slightly overlap each successive path to ensure all snow will be removed.
- Throw snow downwind whenever possible.
- Adjust the skid plates to proper height for current snow conditions. See “TO ADJUST SKID PLATES” in this section of this manual.
- For extremely heavy snow, reduce the width of snow removal by overlapping previous path and moving slowly.
- Keep engine clean and clear of snow during use. This will help air flow and extend engine life.
- After snow-throwing is completed, allow engine to run for a few minutes to melt snow and ice off the engine.
- Clean the entire snow thrower thoroughly after each use and wipe dry so it is ready for next use.

WARNING: Do not operate snow thrower if weather conditions impair visibility. Throwing snow during a heavy, windy snowstorm can blind you and be hazardous to the safe operation of the snow thrower.

MAINTENANCE

MAINTENANCE SCHEDULE

FILL IN DATES
AS YOU COMPLETE
REGULAR SERVICE

		BEFORE EACH USE	AFTER EACH USE	EVERY 25 HOURS OR EVERY SEASON	EVERY 50 HOURS	EVERY 100 HOURS	BEFORE STORAGE	SERVICE DATES				
THROWER	Check for Loose Fasteners	✔					✔					
	Clean / Inspect Snow Thrower		✔				✔					
	Check / Replace V-Belts				✔							
	Lubrication Chart			✔			✔					
ENGINE	Check Engine Oil Level	✔										
	Change Engine Oil			✔								
	Inspect Muffler				✔							
	Check / Replace Spark Plug					✔						
	Empty Fuel Tank						✔					

GENERAL RECOMMENDATIONS

The warranty on this snow thrower does not cover items that have been subjected to operator abuse or negligence. To receive full value from the warranty, operator must maintain snow thrower as instructed in this manual. Some adjustments will need to be made periodically to properly maintain your snow thrower.

All adjustments in the Service and Adjustments section of this manual should be checked at least once each season.

- Once a year, you should replace the spark plug and check belts for wear. A new spark plug will help your engine run better and last longer.
- Follow the maintenance schedule in this manual.

NOTE: Use only Original Equipment Manufacturer (OEM) parts to service this unit. Failure to do so can cause the unit to malfunction and pose a risk of injury to the operator.

BEFORE EACH USE

1. Check engine oil level.
2. Check for loose fasteners.
3. Check controls to be sure they are functioning properly.

LUBRICATION

Keep your snow thrower well lubricated
(See “LUBRICATION CHART”).

At the beginning of each season, or every 25 hours of use, apply a small amount of white lithium grease to the interlock bosses.

LUBRICATION CHART

① **SAE 5w30 Motor Oil**
② **See “Engine” in Maintenance section**
③ **White Lithium Grease**

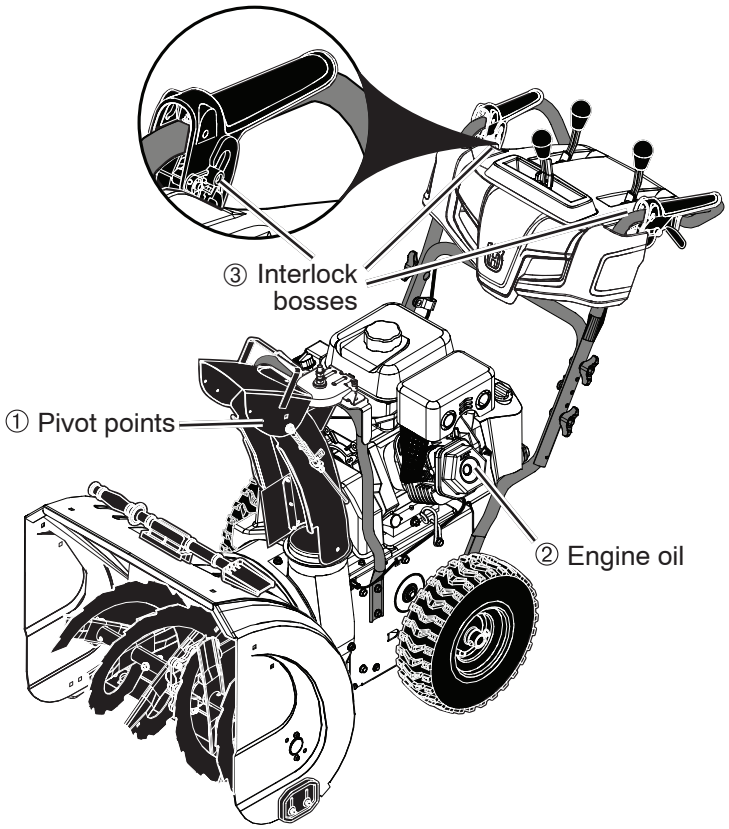

MAINTENANCE

SNOW THROWER

Always observe the safety rules when performing any maintenance.

TIRES

- Maintain proper air pressure in both tires (14–17 PSI).
- Keep tires free of gasoline and oil, which can harm rubber.

NOTE: To seal tire punctures and prevent flat tires due to slow leaks, tire sealant may be purchased from your local parts dealer. Tire sealant also prevents tire dry rot and corrosion.

BELTS

Check belts for deterioration and wear after every 50 hours of operation and replace if necessary. The belts are not adjustable. Replace belts if they begin to slip from wear. (See “TO REMOVE BELT COVER” in the Service and Adjustments section of this manual).

The belts on your snow thrower are of special construction and should be replaced by original equipment manufacturer (OEM) belts available from your nearest dealer. Using other than OEM belts can cause personal injury or damage to the snow thrower.

AUGER GEAR CASE

- The gear case was filled with lubricant to the proper level at the factory. The only time the lubricant needs attention is if service has been performed on the gear case.
- If lubricant is required, use only Ronex ED #1 grease.

TRACTION DRIVE SYSTEM

DO NOT lubricate the drive components inside the snow thrower. The sprockets, hex shafts, drive disc and friction wheel require no lubrication. The bearings and bushings are lifetime lubricated and require no maintenance.

CAUTION: Any lubricating of the above components can cause contamination of the friction wheel and damage to the drive system of your snow thrower.

ENGINE

See engine manual.

LUBRICATION

Use only high quality detergent oil rated with API service classification SG–SL. Select the oil's SAE viscosity grade according to your expected operating temperature.

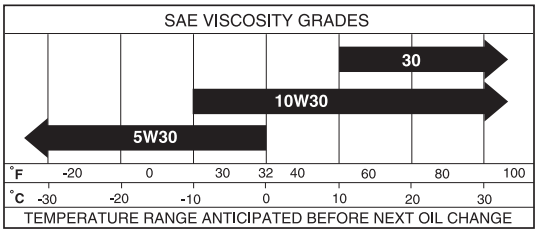

NOTE: Although multi-viscosity oils (5W30, 10W30 etc.) improve starting in cold weather, these multi-viscosity oils will result in increased oil consumption when used above 32°F. Check your engine oil level more frequently to avoid possible engine damage from running low on oil.

Change the oil after every 25 hours of operation or at least once a year if the snow thrower is not used for 25 hours in one year.

Check the crankcase oil level before starting the engine and after each five (5) hours of continuous use. Tighten oil fill cap / dipstick securely each time you check the oil level.

TO CHANGE ENGINE OIL

Determine temperature range anticipated before next oil change. All oil must meet API service classification SG–SL.

- Be sure snow thrower is on level surface.
- Oil will drain more freely when warm.
- Catch oil in a suitable container.

NOTE: A wheel may be removed from snow thrower for easier access to the oil drain plug and placement of a suitable container.

1. Remove safety ignition key and disconnect spark plug wire from spark plug. Place wire where it cannot come in contact with spark plug.
2. Clean area around drain plug.
3. Remove drain plug and drain oil in a suitable container.
4. Install drain plug and tighten securely.
5. Wipe off any spilled oil from snow thrower and engine.
6. Install left wheel (if removed for draining oil). Be sure to install wheel pin and retainer pin into proper hole in wheel axle (See “TO REMOVE WHEELS” in the Service and Adjustments section of this manual).
7. Remove oil fill cap/dipstick. Be careful not to allow dirt to enter the engine.
8. Refill engine with oil through oil dipstick tube. Pour slowly. Do not overfill. For approximate capacity see “PRODUCT SPECIFICATIONS” section of this manual.
9. Use gauge on oil fill cap/dipstick for checking level. Be sure dipstick cap is tightened securely for accurate reading. Keep oil at “FULL” line on dipstick.
10. Wipe off any spilled oil.

MUFFLER

Inspect and replace corroded muffler as it could create a fire hazard and/or damage.

SPARK PLUG

Replace spark plug at the beginning of each season or after every 100 hours of operation, whichever occurs first. Spark plug type and gap setting are shown in the “PRODUCT SPECIFICATIONS” section of this manual.

CLEANING

IMPORTANT: For best performance, keep snow thrower housing free of any dirt or trash. Clean the outside of your snow thrower after each use.

WARNING: Remove safety ignition key and disconnect spark plug wire from spark plug. Place wire where it cannot come in contact with spark plug.

- Keep finished surfaces/wheels free of gasoline, oil, etc.
- We do not recommend using a garden hose to clean your snow thrower unless the electrical system, muffler and carburetor are covered to keep water out. Water in engine can result in shortened engine life.

WARNING: To avoid serious injury, before performing any service or adjustments:

1. **Be sure the on/off switch is in the OFF position.**
2. **Remove safety ignition key.**
3. **Make sure the augers and all moving parts have completely stopped.**
4. **Disconnect spark plug wire from spark plug and place wire where it cannot come in contact with plug.**

SNOW THROWER

TO ADJUST SNOW THROWER HEIGHT

See “TO ADJUST SKID PLATES” and “SCRAPER BAR” in the Operation section of this manual.

CHUTE DEFLECTOR

The chute deflector, attached to the top of the discharge chute, is provided to direct discharging snow away from the operator. If the deflector becomes damaged, it should be replaced.

WARNING: To avoid serious injury, never operate your snow thrower with the deflector removed or damaged.

- To change direction and/or distance snow is discharged, see “TO CONTROL SNOW DISCHARGE” in the Operation section of this manual.

SHEAR BOLTS (See Fig. 18)

AUGER SHEAR BOLTS

Both right and left-hand augers are secured to the auger shaft with a shear bolt and hex nut. Should a foreign object or ice become lodged in the augers, the shear bolts are designed to break, preventing damage to any other components. If one or both augers do not turn when auger control lever is engaged, check to see if one or both of the bolts have sheared. To replace the shear bolts:

1. Disengage all controls and move throttle control to STOP position. Wait for all moving parts to stop.
2. Remove safety ignition key and disconnect spark plug wire from spark plug. Place wire where it cannot come in contact with spark plug.
3. Align hole in auger hub with hole in auger shaft and install a new 1/4-20 x 2" shear bolt. Install 1/4-20 lock nut and tighten securely.

CAUTION: Do not substitute. Use only original equipment shear bolts as supplied with your snow thrower.

4. Insert safety ignition key and reconnect spark plug wire to spark plug.

IMPELLER SHEAR BOLTS

The impeller is secured to the impeller shaft with two (2) shear bolts and hex nuts. Should a foreign object or ice become lodged in the impeller, the shear bolts are designed to break, preventing damage to any other components. If impeller does not turn when auger control lever is engaged, check to see if the shear bolts have sheared.

To replace the shear bolts:

1. Disengage all controls and move throttle control to STOP position. Wait for all moving parts to stop.
2. Remove safety ignition key and disconnect spark plug wire from spark plug. Place wire where it cannot come in contact with spark plug.
3. Align holes in impeller hub with holes in impeller shaft and install two (2) new 2" shear bolts. Install 1/4-20 locknuts and tighten securely.

CAUTION: Do not substitute. Use only original equipment capscrew/shear bolts as supplied with your snow thrower.

4. Insert safety ignition key and reconnect spark plug wire to spark plug.

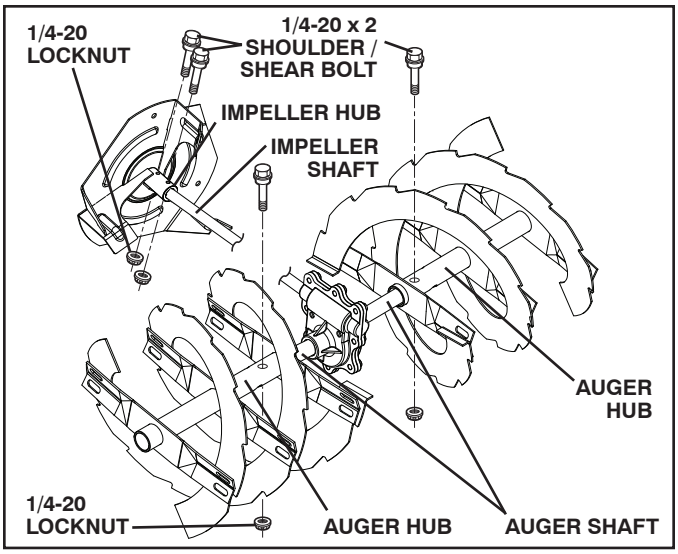

FIG. 18

TO REMOVE BELT COVER (See Fig. 19)

1. Loosen the two (2) screws securing belt cover to frame.
2. Remove belt cover.

- Replace belt cover by installing cover and tightening screws.

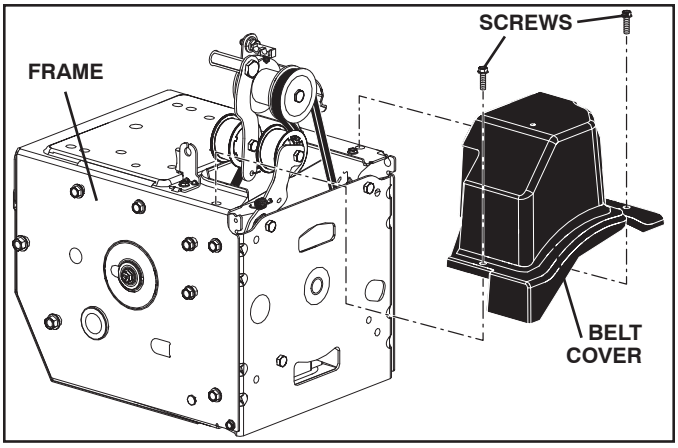

FIG. 19

TO REPLACE BELTS

The auger and traction drive belts are not adjustable. If the belts are damaged or begin to slip from wear, they should be replaced. It is recommended that the belt(s) be replaced by a service center/department.

NOTE: It is recommended that both the auger and traction drive belt be replaced at the same time.

The V-belts on your snow thrower are of special construction and should be replaced by original equipment manufacturer (OEM) belts available from your nearest service center/department. Using other than OEM belts can cause personal injury or damage to the snow thrower.

WARNING: Belt replacement requires separation of the snow thrower. While separating the auger housing from the frame assembly, it is important that an assistant stand in the operating position and hold the snow thrower handles. Serious personal injury and/or damage to the unit could occur if the snow thrower should fall during the belt changing process.

BEFORE REPLACING BELTS

1. REMOVE GASOLINE FROM FUEL TANK - Drain gasoline from fuel tank into a suitable container, outdoors, away from fire or flame. Wipe up any spilled gasoline.
2. REMOVE DISCHARGE CHUTE - Loosen lock nut securing chute rotator head to mounting bracket to allow chute rotator head to be raised and discharge chute to be removed from snow thrower. See Fig. 20.

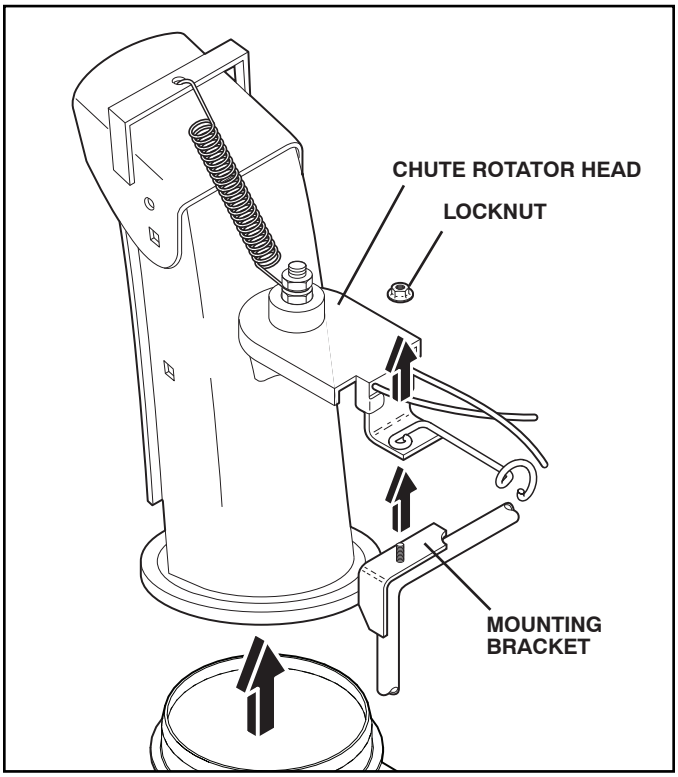

FIG. 20

3. REMOVE BELT COVER - See “TO REMOVE BELT COVER” in this section of this manual.

AUGER BELT REPLACEMENT (See Fig. 21)

TO REMOVE AUGER BELT

1. Remove upper 5/16” bolts and lower 1/4” bolts from both sides of the frame assembly. Do not discard bolts.
2. Loosen but DO NOT REMOVE lower 5/16” bolts on both sides of the frame assembly.
3. Remove the auger belt from the engine pulley.
4. Tip the back section down. The front section will tip forward at the same time, as the bottom bolt acts as a hinge between the front and back sections. Use a block under the hinge point to secure the snow thrower in the tipped position as shown.
5. Move auger belt tensioner arm and remove auger belt from around the arm.

TO INSTALL AUGER BELT

1. Move belt tensioner arm and place auger belt around and inside groove of the auger pulley.

NOTE: Ensure the belt is not pinched between the frame and auger housing as you bring the unit back together.

2. Remove block from under the snow thrower. Lift the handles to tip the back section up. The front section will tip back and pivot to rejoin the back section.
3. Ensure belt is routed inside auger pulley groove properly.
4. Install the previously removed and loosened 5/16” bolts, and tighten securely. (8-12 Ft. Lbs. / 11-16 Nm).

   Install the previously removed 1/4” bolts (X2), and tighten securely. (4-6 Ft. Lbs. / 5-8 Nm).
5. Install auger belt onto engine pulley. Ensure belt is routed correctly around idler pulley and seated properly in engine pulley groove.
6. Operate all controls to ensure belts are installed properly and that all components are moving correctly.

Continue with “AFTER REPLACING BELTS” instructions.

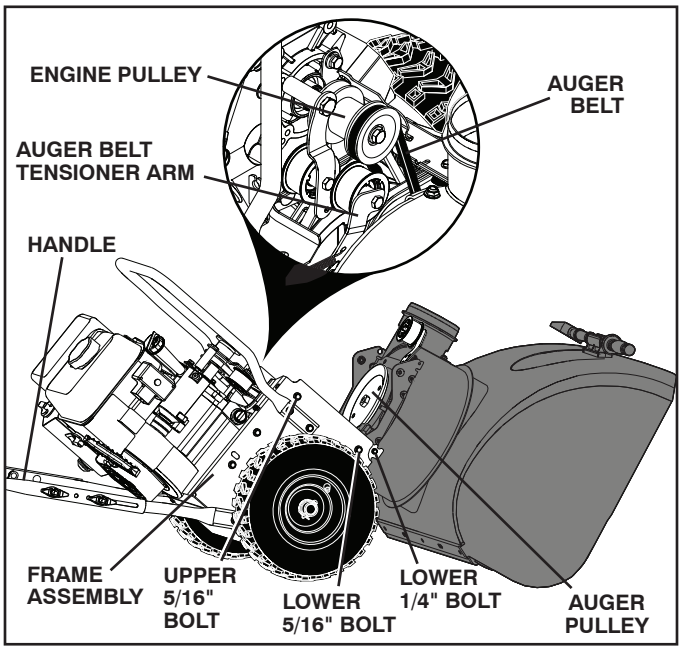

FIG. 21

DRIVE BELT REPLACEMENT (See Fig. 22)

TO REMOVE DRIVE BELT

1. Remove auger belt. See “TO REMOVE AUGER BELT” in this section.
2. Remove tensioner spring attached to drive belt tensioner arm.
3. Remove return spring holding the swing plate in place.
4. Remove arm bolt and drive belt tensioner arm.
5. Remove pulley bolt and washer, engine pulley, and drive belt from engine.
6. Remove the top bolt holding the swing plate to frame assembly.
7. Pivot and hold the swing plate away from snow thrower and remove drive belt from drive pulley.

TO INSTALL DRIVE BELT

1. Pivot and hold swing plate away from snow thrower. Place drive belt onto drive pulley. Ensure drive belt is routed in drive pulley groove properly before lowering swing plate.
2. Install previously removed top bolt. Tighten securely.
3. Place drive belt into engine pulley groove before installing onto engine shaft.
4. Install previously removed washer and bolt and secure engine pulley onto engine. Tighten securely (30-35 Ft. Lbs. / 41-47 Nm).
5. Install drive belt tensioner arm and arm bolt onto engine. Tighten securely.
6. Install return spring onto swing plate.
7. Install tensioner spring onto tensioner arm.
8. Operate all controls to ensure belts are installed properly and that all components are moving correctly.
9. Install auger belt. See “TO INSTALL AUGER BELT” in this section.

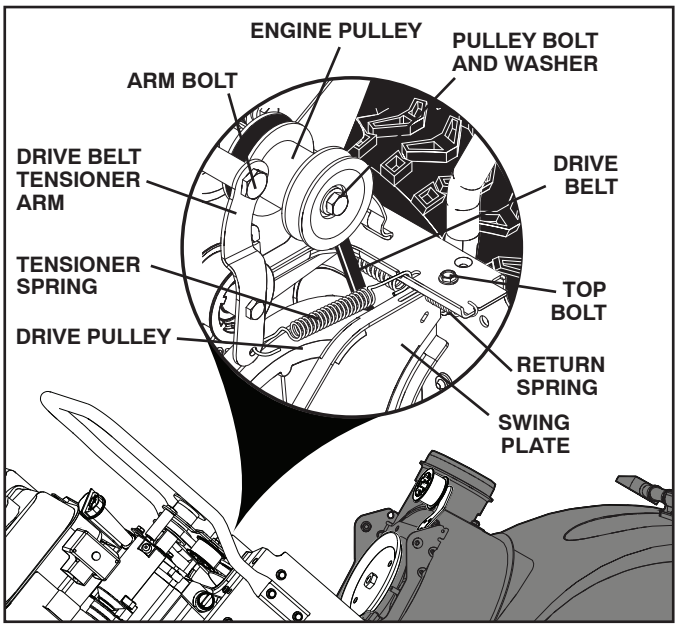

FIG. 22

AFTER REPLACING BELT(S)

1. INSTALL BELT COVER and two (2) screws. Tighten securely.
2. INSTALL DISCHARGE CHUTE – See “INSTALL DISCHARGE CHUTE / CHUTE Rotator HEAD” in the Assembly section of this manual.

TO REMOVE WHEELS (See Fig. 23)

- Remove the wheel pin and retainer pin and remove wheel from axle.

NOTE: To seal punctures or prevent flat tires due to slow leaks, tire sealant may be purchased from your local parts dealer. Tire sealant also prevents tire dry rot and corrosion.

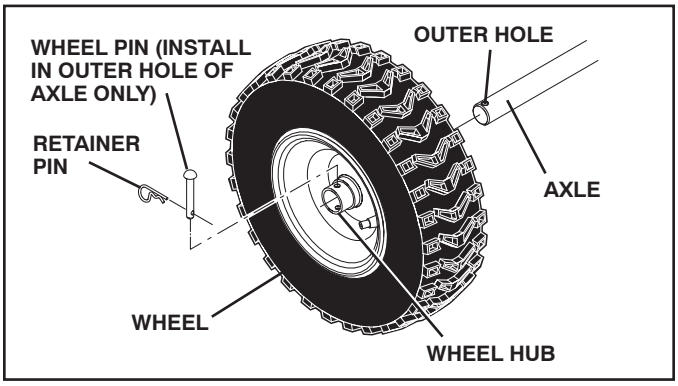

FIG. 23

ENGINE

SEE ENGINE MANUAL

CARBURETOR

Your carburetor is not adjustable. Engine performance should not be affected at altitudes up to 2,134 meters. If your engine does not operate properly due to suspected carburetor problems, take your snow thrower to a service center/department.

ENGINE SPEED

Never tamper with the engine governor, which is factory set for proper engine speed. Overspeeding the engine above the factory high speed setting can be dangerous and will void the warranty. If you think the engine-governed high speed needs adjusting, contact a service center/department, which has the proper equipment and experience to make any necessary adjustments.

TO ADJUST SPEED SELECT AND DRIVE ENGAGEMENT CABLE TENSION (See Fig. 24)

After many hours of use, if first gear seems to slip or seems too slow, adjustments may need to be made to the Speed Select and Drive Engagement cable tensions to shorten their lengths.

To adjust the Speed Select cable:

1. Adjust cable tension by loosening the jam nut next to the turn buckle.
2. Grasp the short section and hold while turning the long section to lengthen the adjuster.
3. Turn the long section two turns and tighten jam nut.
4. Test the first gear drive speed.

If it is still too slow or seems to be slipping, adjust the Drive Engagement cable to shorten its length.

To adjust the Drive Engagement cable:

1. Adjust cable tension by loosening the jam nut, next to the turn buckle.
2. Grasp the short section and hold, while turning the long section to lengthen the adjuster.
3. Turn the long section two turns and tighten jam nut.
4. Test the first gear drive speed.

If first gear still appears to be too slow or slipping, repeat this procedure starting with the Speed Select cable.

TO ADJUST CHUTE ROTATOR CABLE TENSION (See Fig. 24)

1. Adjust cable tension by loosening the jam nut next to the turn buckle.
2. Grasp the short section and hold while turning the long section to lengthen the adjuster.
3. Adjust until cable is snug and tighten jam nuts.

CAUTION: Do NOT adjust auger control cable tension. The auger cable is set at the factory. Any adjustment by the consumer may create an unsafe machine condition. If you feel the cable needs to be adjustment, please contact an authorized service center/department.

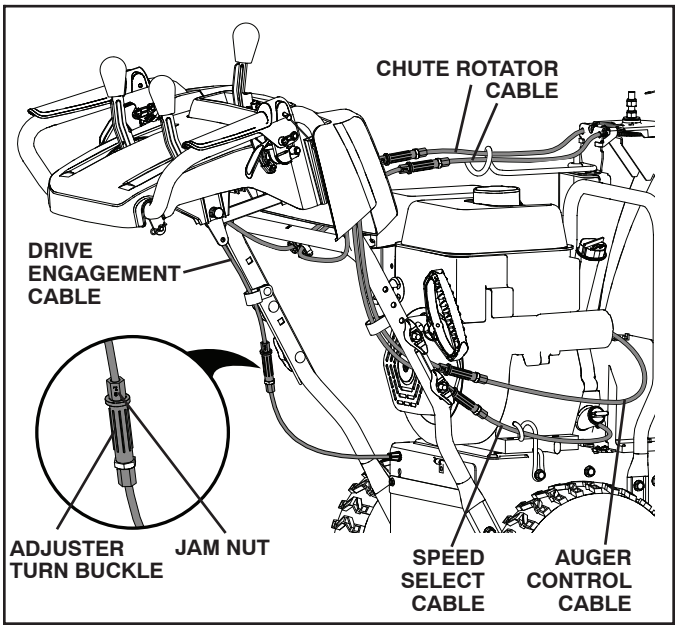

FIG. 24

STORAGE

Immediately prepare your snow thrower for storage at the end of the season or if the unit will not be used for 30 days or more.

WARNING: Never store the snow thrower with gasoline in the tank inside a building where fumes may reach an open flame, spark or pilot light as on a furnace, water heater, clothes dryer or gas appliance. Allow the engine to cool before storing in any enclosure.

SNOW THROWER

When snow thrower is to be stored for a period of time, clean it thoroughly, remove all dirt, grease, leaves, etc. Store in a clean, dry area.

1. Clean entire snow thrower (See “CLEANING” in the Maintenance section of this manual).
2. Inspect and replace belts, if necessary (See “TO REPLACE BELTS” in the Service and Adjustments section of this manual).
3. Lubricate as shown in the Maintenance section of this manual.
4. Be sure that all nuts, bolts, screws, and pins are securely fastened. Inspect moving parts for damage, breakage and wear. Replace if necessary.
5. Touch up all rusted or chipped paint surfaces; sand lightly before painting.

ENGINE

See engine manual.

FUEL SYSTEM

IMPORTANT: It is important to prevent gum deposits from forming in essential fuel system parts such as carburetor, fuel hose, or tank during storage. Also, alcohol blended fuels (called gasohol or using ethanol or methanol) can attract moisture which leads to separation and formation of acids during storage. Acidic gas can damage the fuel system of an engine while in storage.

- Empty the fuel tank by starting the engine and letting it run until the fuel lines and carburetor are empty.
- Never use engine or carburetor cleaner products in the fuel tank or permanent damage may occur.
- Use fresh fuel next season.

NOTE: Fuel stabilizer is an acceptable alternative in minimizing the formation of fuel gum deposits during storage. Add stabilizer to gasoline in fuel tank or storage container. Always follow the mix ratio found on stabilizer container. Run engine at least 10 minutes after adding stabilizer to allow the stabilizer to reach the carburetor. Do not drain the gas tank and carburetor if using fuel stabilizer.

ENGINE OIL

Drain oil (with engine warm) and replace with clean engine oil. (See “ENGINE” in the Maintenance section of this manual).

CYLINDER

1. Remove spark plug.
2. Pour one ounce (29 ml) of oil through spark plug hole into cylinder.
3. Pull recoil starter handle slowly a few times to distribute oil.
4. Replace with new spark plug.

OTHER

- Remove safety ignition key; store it in a safe place.
- Do not store gasoline from one season to another.
- Replace your gasoline can if your can starts to rust. Rust and/or dirt in your gasoline will cause problems.
- If possible, store your snow thrower indoors and cover it to protect it from dust and dirt.
- Cover your snow thrower with a suitable protective cover that does not retain moisture. Do not use plastic. Plastic cannot breathe, which allows condensation to form and will cause your snow thrower to rust.

IMPORTANT: Never cover snow thrower while engine/exhaust area is still warm.

TROUBLESHOOTING

See appropriate section in manual unless directed to a service center/department.

PROBLEM	CAUSE	CORRECTION
Does not start	1. Fuel shut-off valve (if so equipped) in OFF position.	1. Turn fuel shut-off valve to OPEN position.
	2. Safety ignition key is not inserted.	2. Insert safety ignition key.
	3. Out of fuel.	3. Fill fuel tank with fresh, clean gasoline.
	4. Throttle in STOP position (or ON/OFF switch is OFF).	4. Move throttle to FAST position (or ON/OFF switch to ON position).
	5. Choke in OFF position.	5. Move to FULL position.
	6. Primer not depressed.	6. Prime as instructed in the Operation section of this manual.
	7. Engine is flooded.	7. Wait a few minutes before restarting, DO NOT prime.
	8. Spark plug wire is disconnected.	8. Connect wire to spark plug.
	9. Bad spark plug.	9. Replace spark plug.
	10. Stale fuel.	10. Empty fuel tank & carburetor, refill with fresh, clean gasoline.
	11. Water in fuel.	11. Empty fuel tank & carburetor, refill with fresh, clean gasoline.
Loss of power	1. Spark plug wire loose.	1. Reconnect spark plug wire.
	2. Throwing too much snow.	2. Reduce speed and width of swath.
	3. Fuel tank cap is covered with ice or snow.	3. Remove ice and snow on and around fuel tank cap.
	4. Dirty or clogged muffler.	4. Clean or replace muffler.
Engine idles or runs roughly	1. Choke is in FULL position.	1. Move choke to OFF position.
	2. Blockage in fuel line.	2. Clean fuel line.
	3. Stale fuel.	3. Empty fuel tank & carburetor, refill with fresh, clean gasoline.
	4. Water in fuel.	4. Empty fuel tank & carburetor, refill with fresh, clean gasoline.
	5. Carburetor is in need of adjustment or overhaul.	5. Contact an authorized service center/department.
Excessive vibration	1. Loose parts or damaged augers or impeller.	1. Tighten all fasteners. Replace damaged parts. If vibration remains, contact an authorized service center/department.
Recoil starter is hard to pull	1. Frozen recoil starter.	1. See “IF RECOIL STARTER HAS FROZEN” in the Operation section of this manual.
Loss of traction drive / slowing of drive speed	1. Drive belt is worn.	1. Check / replace drive belt.
	2. Drive belt is off of pulley.	2. Check / reinstall drive belt.
	3. Friction drive wheel is worn.	3. Contact an authorized Sears service center/department.
Loss of snow discharge or slowing of snow discharge	1. Auger belt is off of pulley.	1. Check / reinstall auger belt.
	2. Auger belt is worn.	2. Check / replace auger belt.
	3. Clogged discharge chute.	3. Clean snow chute.
	4. Augers / impeller jammed.	4. Remove debris or foreign object from augers / impeller.
Lights not On	1. Motor not running.	1. Start engine.
	2. Loose wire connection.	2. Check wire connections at engine and light.
	3. LED burnt out.	3. Replace LED light module. (Individual LEDs are not replaceable)

Consumer Wheeled Products - Limited Warranty

Husqvarna warrants to the original retail purchaser that this Husqvarna® product is **free from defects in material or workmanship** under normal use and maintenance from the date of retail purchase for the applicable Warranty Period shown on Exhibit A. This Limited Warranty may not be transferred to any subsequent purchaser of this Husqvarna® product. Certain components (e.g., engines and transmissions) are excluded from coverage, and other limitations apply, as described in this document. Husqvarna will repair or replace at its discretion, any defective product or part covered by the Limited Warranty, free of charge at any authorized Husqvarna Servicing Dealer/Center using original OEM Husqvarna replacement parts, subject to the limitations and exclusions described below. Husqvarna does not offer an over-the-counter exchange program.

DISCLAIMERS, LIMITATIONS AND EXCLUSIONS

1. **WARRANTY DISCLAIMER.** THIS LIMITED WARRANTY IS THE SOLE EXPRESS WARRANTY PROVIDED BY HUSQVARNA AND THERE ARE NO WARRANTIES WHICH EXTEND BEYOND THE DESCRIPTION ON THE FACE HEREOF, EXCEPT AS MAY BE PROVIDED BY LAW. THIS WARRANTY IS GIVEN **ONLY** BY HUSQVARNA, AND MAY BE MODIFIED ONLY BY HUSQVARNA. THIS LIMITED WARRANTY IS THE FINAL EXPRESSION OF OUR AGREEMENT, AND IS A COMPLETE AND EXCLUSIVE STATEMENT OF THE TERMS OF THAT AGREEMENT. THIS LIMITED WARRANTY GIVES YOU SPECIFIC LEGAL RIGHTS, AND YOU MAY ALSO HAVE OTHER RIGHTS WHICH VARY BASED ON LOCALITY

2. **LIMITED DURATION.** ANY WARRANTY THAT MAY BE IMPLIED BY LAW (INCLUDING ANY IMPLIED WARRANTY OF FITNESS FOR A PARTICULAR PURPOSE OR USE AND IMPLIED WARRANTY OF MERCHANTABILITY) IS LIMITED TO THE DURATION OF THE APPLICABLE WARRANTY PERIOD UNDER THIS LIMITED WARRANTY. SOME LOCALITIES DO NOT ALLOW LIMITATIONS ON HOW LONG AN IMPLIED WARRANTY LASTS, SO THE ABOVE LIMITATIONS MAY NOT APPLY TO YOU.

3. **EXCLUSIVE REMEDIES.** SOME LOCALITIES, INCLUDING THE PROVINCE OF QUEBEC, DO NOT ALLOW THE EXCLUSION OR LIMITATION OF LIABILITY FOR INJURY TO PERSON OR FOR DAMAGES RESULTING FROM THE FAULT OF THE MANUFACTURER AND/OR THE EXCLUSION OR LIMITATION OF INCIDENTAL OR CONSEQUENTIAL DAMAGES. AS SUCH, SOME OF THE FOLLOWING LIMITATIONS MAY NOT APPLY TO YOU. THE ABOVE REMEDIES ARE THE EXCLUSIVE REMEDIES FOR ANY BREACH OF THIS LIMITED WARRANTY. NO OTHER REMEDY, INCLUDING, BUT NOT LIMITED TO ANY SPECIAL, INCIDENTAL, INDIRECT OR CONSEQUENTIAL DAMAGES, FOR LOST PROFITS, LOST SALES, INJURY TO PERSON OR PROPERTY, OR ANY OTHER INCIDENTAL OR CONSEQUENTIAL LOSS SHALL BE AVAILABLE, AND ALL SUCH DAMAGES ARE HEREBY DISCLAIMED.

4. **Engines, Transmissions and certain other components are NOT covered**. This Limited Warranty does not cover any of the following:

(a) *Engines and Attachments.*Except where otherwise indicated on Exhibit A, all Engines and Attachments are not covered by this Limited Warranty. In most cases, these items are NOT manufactured by Husqvarna in which case they may be covered separately by their respective manufacturer's warranties if one is provided and included with the product at the time of purchase. All such claims must be submitted and sent to the appropriate manufacturer or as otherwise directed in those separate warranties. Husqvarna is not authorized to handle warranty adjustments or repairs on engines manufactured by Briggs & Stratton, Honda, Kawasaki, or Kohler (Husqvarna does handle warranty issues on engines manufactured by Liquid Combustion Technologies (LCT). Husqvarna does not assume any warranty obligation of the other manufacturers' engines under this Limited Warranty.

(b) *Transmissions.* Except where otherwise indicated on ExhibitA, Transmission / Transaxle (including Drive Systems) are not covered by this Limited Warranty. In most cases, these items are NOT manufactured by Husqvarna in which case they may be covered separately by their respective manufacturer's warranties if one is provided and included with the product at the time of purchase. The following transmission / transaxle manufacturers, Dana, Hydro-Gear, Tuff-Torq provide a warranty for the transmission / transaxle to the ultimate purchaser or to Husqvarna. Husqvarna will assign the transmission / transaxle manufacturer's warranty or any rights thereof to the original purchaser of the unit. To obtain transmission / transaxle warranty service, first contact the retailer who you purchased the unit from. Should you require assistance or have any questions concerning transmission / transaxle warranty coverage, contact Husqvarna directly at our website www.husqvarna.com or call 800-487-5951 (US) or 800-805-5523 (Canada) for an authorized Husqvarna service provider. All such claims must be submitted and sent to the appropriate manufacturer or as otherwise directed in those separate warranties. Husqvarna is not authorized to handle warranty adjustments or repairs on transmissions or transaxles. Husqvarna does not assume any obligations under this Limited Warranty for the above listed manufacturers (for exceptions - see Exhibit A).

(c) *Expendable Parts.* This Limited Warranty does not cover general maintenance parts and items ("Expendable Parts"), including without limitation spark plugs, bulbs, filters, lubricants, starter cords, belts, blades, and blade adapters.

(d) *Emissions Control Components.* This Limited Warranty does not cover Emissions control equipment and components to the extent regulated by the U.S. Environmental Protection Agency or similar state, provincial or federal agencies. Such equipment and components are covered by a separate emission control warranty statement supplied with your new product. Please consult this separate warranty statement for details.

5. **Any COMMERCIAL, INSTITUTIONAL, AGRICULTURAL, INDUSTRIAL, INCOME PRODUCING, or RENTAL use will result in either No Warranty or a Shortened Warranty Period.** Depending on the product, there is either NO WARRANTY (whether statutory, contractual or otherwise) or a reduced warranty if the product is used for commercial, institutional, agricultural, industrial, income producing, or rental purposes and, in such circumstances, this Limited Warranty is offered instead of and replaces any warranty regime provided for by law. Please refer to Exhibit A.

6. **Reconditioned or Refurbished Products have a 30 Day Limited Warranty.** Under this Limited Warranty, Certified Factory Reconditioned or Refurbished products have a 30 Day Limited Warranty for parts and labor for Non-Commercial Use. Products are only reconditioned at the Husqvarna Factory.

7. **Owner's (Your) Responsibilities.** To preserve your rights under this Limited Warranty, you must exercise reasonable care and use of the product, including, following the preventative maintenance, storage, fuel and oil usages as prescribed in the enclosed operator's manual. For example, the following items are the Owner's responsibility and are **not** covered by this Limited Warranty:

a. Set-up and pre-delivery service, and engine tune-ups;
b. Adjustments after the first (30) thirty days of purchase and beyond, such as throttle cable, belt guides adjustments; and
c. Preventative maintenance as outlined in the operator's manual.

In addition, you must cease using the product immediately upon any failure or damage. The product should be taken to an authorized Husqvarna servicing dealer prior to any further use.

8. **Damages resulting from normal aging, wear and tear or neglect are NOT covered.** The Limited Warranty does not cover damage other than that resulting from defects in material or workmanship. The following are NOT considered defects in material or workmanship, and therefore are NOT covered.

(a) Abrasion to mower decks;

(b) Tires damaged by external punctures;

(c) Natural discoloration of materials due to ultraviolet light;

(d) Damage to cutting equipment by way of contact with, rocks, or other non-approved materials and/or structures;

In addition, this Limited Warranty does not cover damages, malfunctions or failures resulting from abuse or neglect of the product related to or including any of the following:

(e) Failure to provide or perform required maintenance services as prescribed in the operator's manual;

(f) Abuse, misuse, neglect, modifications, alterations, normal wear, improper servicing, use of unauthorized attachments, Lack of lubrication or engine failure, due to the use of oils that do not meet Engine manufacturer's specifications;

(g) Use of gasohol (fuel containing ethanol), containing methanol (fuel containing wood alcohol). Ethanol fuel E15 or E85 is **NOT** approved for use in Husqvarna products. Using E15 or E85 fuel will cause major engine damage which **is NOT** covered by this Husqvarna warranty. NOTE: Gasohol (fuel containing ethanol), which contains a maximum 10% ethanol (grain alcohol) is approved. The prescribed mixing ratio of gasoline to oil is 50:1 and is listed in the Husqvarna oil label and covered in your operator's manual.

(h) Use of ether or any starting fluids;

(i) Pressure cleaning or steam cleaning the product;

(j) Use of spark plugs other than those meeting emission performance requirements listed in the operator's manual;

(k) Tampering with engine speed governor or emission components, or running engines above specified and recommended engine speeds as listed in your operator's manual;

(l) Operation of the unit with improperly installed/removed or modified cutting shields, guards, or safety devices;

(m) Any removed/damaged air filter, excessive dirt, abrasives, salt water, moisture, corrosion, rust, varnish, stale fuel, or any adverse reaction due to incorrect storage procedures;

(n) Failures due to improper set up, pre-delivery service or repair service by anyone other than an authorized Husqvarna servicing dealer during the warranty period;

(o) Dirt contaminated grease or oil, use of incorrect type of greases or oils, failure to comply with recommended greasing intervals, water or moisture damage, and/or improper storage;

(p) Sprayers pumping or spraying caustic or flammable materials, lack of or broken strainers; or

(q) Continued use of product, after initial operational problem or failure occurs.

9. **Reinforced Stamped (Armor Protected) 10 Year Limited & Fabricated Limited Lifetime, Deck Warranties.** These Limited Warranties are for the deck shell only – mechanical components/parts such as belts, pulleys, spindle housings, bearings, blades, rods, height adjusters, caster/anti scalp wheels etc… are NOT covered. The Limited Lifetime Warranty does not cover damage other than that resulting from defects in material or workmanship. The following are NOT considered defects in material or workmanship, and therefore are NOT covered:

(a) Abrasion to mower decks, including sand wear;

(b) Damage to cutting equipment by way of contact with, rocks, or other non-approved materials and/or structures;

(c) Rust and corrosion; and

(d) Natural discoloration of paint or other materials due to ultraviolet light.

HOW TO OBTAIN SERVICE

10. **Authorized Husqvarna Servicing Dealer/Center.** In order to obtain warranty coverage it is your responsibility (at your expense) to deliver or ship your Husqvarna unit to an authorized Husqvarna Servicing Dealer/Center and arrange for pick-up or return of your unit after the repairs have been made. If you do not know the location of your nearest authorized Husqvarna Servicing Dealer, call Husqvarna, at 1-800-487-5951 during the hours of 8:00 AM to 8:00 PM Eastern Standard Time, or visit www.husqvarna.com. Should you require assistance or have questions concerning this Limited Warranty, you may contact us at 800-487-5951 (US) or 800-805-5523 (Canada) during the hours of 8:00 AM to 8:00 PM Eastern Standard Time or contact us through the web at www.husqvarna.com.

11. **Documentation Required.** You must maintain and present Proof of purchase (including date, product model and, if applicable, engine serial number) to an authorized Husqvarna Servicing Dealer for warranty service under this Limited Warranty. Proof of purchase rests solely with you. Husqvarna encourages you to register your product online at www.usa.husqvarna.com (US & Canada) to help ensure, among other things, that you can be notified of important product information. However, registering your product is not a condition of warranty service.

Husqvarna Professional Products, NA, Inc.

9335 Harris Corners Parkway, Suite 500, Charlotte, NC28269

575 49 43-01 W 2013 IR

Consumer Wheeled Limited Warranty Chart 2013

Exhibit A

Product/Component	***Consumer*** *(personal, household use only)*	***Commercial*** *(any commercial, professional, institutional, agricultural, or income producing use, other than Rental Use)*	***Rental*** *(any rental usage)*
Riding Lawn Tractors:			
Frame, Chassis, Front Axle	5 Years	No Warranty	No Warranty
Engine*	*	*	*
Transmission (if made by Husqvarna/Peerless)	3 Years	No Warranty	No Warranty
Transmission (if third party)**	**	**	**
XLS Models only - stamped deck shell. Armor Protected Limited Warranty	10 Years	No Warranty	No Warranty
Fabricated Deck shell. Limited Lifetime Warranty	***	No Warranty	No Warranty
Battery	1 Year Pro-rated	No Warranty	No Warranty
Other Non-Expendable Components	3 Years	No Warranty	No Warranty
*Residential Zero Turn Mowers (**RZ Only**)*			
Engine*	*	*	*
Transmission **	**	No Warranty	No Warranty
RZ4623 (967009801 & 967009802) RZ5426 (967003601 & 967003602) - stamped deck shell. Armor Protected Limited Warranty	10 Years	No Warranty	No Warranty
Fabricated Deck shell. Limited Lifetime Warranty	***	No Warranty	No Warranty
Battery	1 Year Pro-rated	No Warranty	No Warranty
Other Non-Expendable Components	3 Years	No Warranty	No Warranty
*Residential Zero Turn Mowers (**EZ, MZ, M-ZT**)*			
Engine*	*	*	*
Transmission** **(EZ & MZ Zero Turn)**	2 Years **	1 Year **	90 days
Transmission** **(M-ZT Zero Turn)**	2 Years **	2 Years **	90 days
MZ5424S, MZ5425S, MZ5424SR, stamped deck shell. Armor Protected Limited Warranty. Product # 967003902, 967003903, & 25021.	10 Years	No Warranty	No Warranty
Fabricated Deck shell. Limited Lifetime Warranty	***	No Warranty	No Warranty
Battery	1 Year Pro-rated	1 Year Pro-rated	No Warranty
Other Non-Expendable Components	3 Years	1 Year	No Warranty
Snow Throwers, Tillers, LE475 Edger			
Engine*	*	*	*
Auger Gearbox	5 Years	90 days	90 days
Other Non-Expendable Components	3 Years	90 days	90 days
Tiller Tines	***	No Warranty	No Warranty
Walk Behind Mowers, High Wheel Trimmer			
Engine*	*	*	*
Battery	1 Year Pro-rated	No Warranty	No Warranty
Other Non-Expendable Components	3 Years	No Warranty	No Warranty
Hovering Trimmers			
Engine*	*	*	*
Other Non-Expendable Components	2 Years	1 Year	90 days
Front Mounted Deck Riders (120S, 220T, 322T)			
Frame, Chassis, Front Axle	3 Years	No Warranty	No Warranty
Engine*	*	*	*
Transmission	**	No Warranty	No Warranty
Battery	1 Year Pro-rated	No Warranty	No Warranty
Other Non-Expendable Components	3 Years	No Warranty	No Warranty
Cultivators			
Battery	1 Year Pro-rated	No Warranty	No Warranty
Other Non-Expendable Components	2 Years	No Warranty	No Warranty
Spreaders			
Spreader	1 Year	1 Year	1 Year
Robotic Mowers			
Robotic Mower	2 Years	90 days	90 days
Battery	1 Year	1 Year	1 Year
	Consumer	Commercial	Rental

Consumer Wheeled Limited Warranty Chart 2013

Exhibit A

Product/Component	***Consumer*** *(personal, household use only)*	***Commercial*** *(any commercial, professional, institutional, agricultural, or income producing use, other than Rental Use)*	***Rental*** *(any rental usage)*
Parts & Accessories (if purchased)			
Accessories (e.g., grass catcher, bumper guard accessories, etc.	1 Year	No Warranty	No Warranty
Parts (e.g., belts, blades, etc.)	90 days	No Warranty	No Warranty
Parts & Accessories (if replaced in Warranty Service)			
Replacement parts and/or accessories provided under this Limited Warranty are warranted only for the BALANCE of the warranty period applicable to the part or accessory that was replaced.	See to left	See to left	See to left
	Consumer	***Commercial***	***Rental***

* See Separate Engine Manufacturer's or Manufacturer's warranty. LCT Engines on specific Snow Throwers & Tillers, warranty through Husqvarna.

** See reference 4 (b) of the warranty statement.

RZ - Two (2) Year Consumer warranty, parts & labor, with Hydro-Gear Distributor network.

EZ - One (1) Year Commercial warranty, parts & labor, with Husqvarna.

Two (2) Year Consumer warranty, parts & labor, with Hydro-Gear Distributor network.

MZ - (ZT3100 Transmission) One (1) Year Commercial warranty, parts & labor, with Hydro-Gear Distributor network.

(ZT3100 Transmission) Two (2) Years Consumer warranty, parts & labor, with Hydro-Gear Distributor network.

M-ZT - (ZT3400 transmission) Two (2) Year warranty, parts & labor, with Hydro-Gear Distributor network.

*** "Limited Lifetime Warranty" on Tiller tines and Fabricated Deck shell is for the life of the product or 7 (seven) years after the last date of the complete unit's final production, whichever comes first. Deck Shell replacement will be limited to a maximum of two (2) decks within the Limited Lifetime Warranty.

Armor Protected Stamped Deck Shell Example Below

Armor Protected Stamped Deck Shell Reinforced area

Fabricated Deck Shell Example Below

Stamped Deck Shell below, NOT reinforced

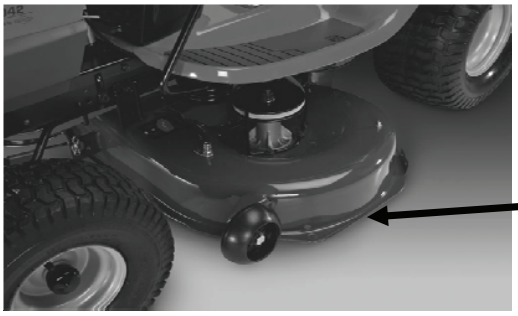

No reinforced area

SERVICE NOTES

SERVICE NOTES

SERVICE NOTES

08/21/2014 BD/TH